HUBBELL PCORE ELECTRIC	kV CLASS 230 kV	BIL 900 kV	Uy 146 kV
	CURRENT RATING: 2500 AMP BOTTOM CONNECTED		
DATE 9-16-98	REV. DATE 8-24-15		
MAXIMUM ALTITUDE 10000 ft [3000 m]	MIN. CREEP 230.00 [5842.0]	MIN. STRIKE 78.00 [1981.2]	
NET WEIGHT 721 lb [327 kg]	CREEP/L-G 1.73 [44.0]	STD. IEEE C57.19.00/01	
ANGLE OF INCLINATION FROM THE VERTICAL 0° TO 60°	PCB CONTENT OF OIL IS LESS THAN 1 ppm		

DWG.	CATALOG NUMBER	GLAZE COLOR
SD	POC900B2500S	BROWN
SD	POC900G2500S	LT. GRAY

TITLE

POC BUSHING

TRANSFORMER – BREAKER INTERCHANGEABLE

SILVER PLATED BRASS TOP TERMINAL

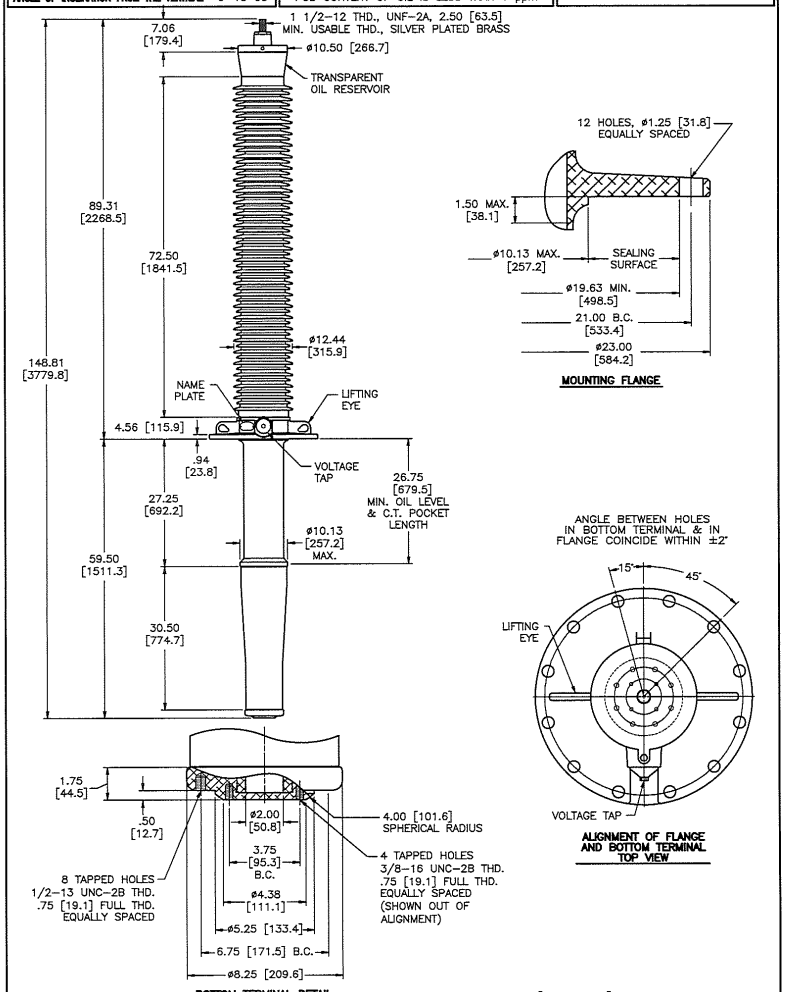

BOTTOM TERMINAL DETAIL

MOUNTING FLANGE

ALIGNMENT OF FLANGE AND BOTTOM TERMINAL TOP VIEW

DIMENSIONS IN INCHES [MILLIMETERS]

REVISION UPDATED FORMAT, CREEP/L-G WAS CREEP/Uy, WEIGHT WAS 735

SCALE 1/16

NOTE TO PURCHASER: ALL SALES OF PCORE PRODUCTS ARE SUBJECT TO OUR STANDARD TERMS AND CONDITIONS AND THE LIMITED WARRANTIES THEREUNDER